Интернет магазин промышленного швейного оборудования http://procapitalist.ru/sms

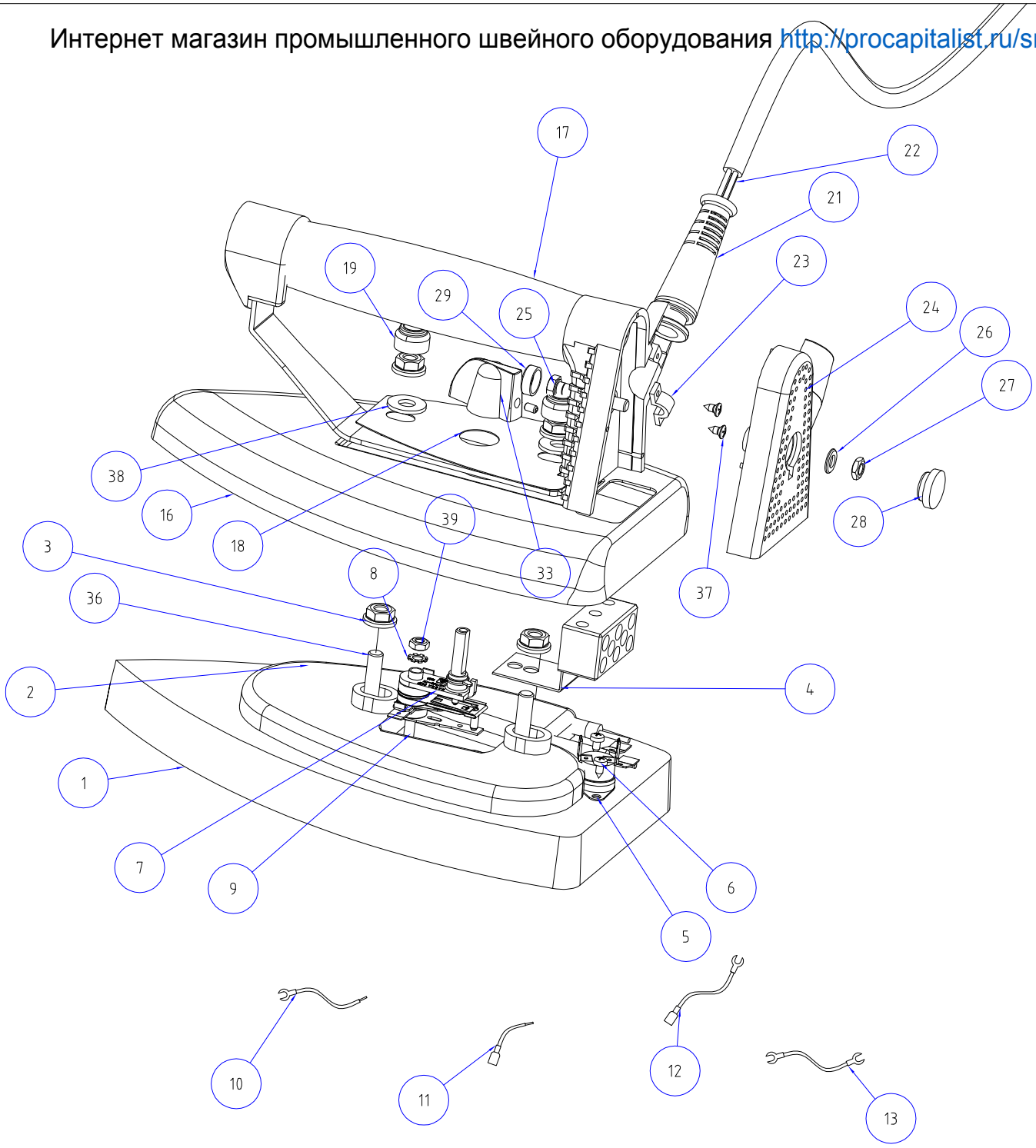

ATTENTION !

QUOTE " DRW.NAME " AND " REV.NO " WHEN ORDERING

NO	ITEM	QTY	NO	ITEM	QTY
01	ALUMINIUM SOLE-PLATE STB 110	1	21	CABLE SLIT	1
02	ALUMINIUM INJECTION HEATING ELEMENT	1	22	CABLE FOR IRON 3x1 TEXTILE BRAIDED	1
03	M6 NUTS (2 PCS)	4	23	PLASTIC CABLE CLAMP FOR IRON	1
04	CONNECTOR WITH ANGLE IRON	1	24	LID OF REAR COVER	1
05	TEMPERATURE FUSE	1	25	M4 SCREW FOR REAR COVER	1
06	SHEET METAL	2	26	M4 WASHER FOR REAR COVER	1
07	BIMETAL ADJUSTABLE THERMOSTAT	1	27	M4 NUT FOR THE SCEW OF REAR COVER	1
08	WASHER FOR ELEVATING ELEMENT	1	28	HOUSING FOR THE SCREW OF REAR COVER	1
09	M4 NUT	1	29	HOUSING FOR THE SCREW OF REAR COVER	1
10	CABLE (BETWEEN THERMOSTAT AND CONNECTOR)	1	33	THERMOSTAT KNOB	1
11	CABLE (BETWEEN THE FUSE AND CONNECTOR)	1	34	WIRE HOSE CLAMP	1
12	CABLE (BETWEEN ELEMENT AND FUSE)	1	36	M6 PIN	2
13	CABLE (BETWEEN THERMOSTAT AND THE ELEMENT)	1	37	SCREW	2
15	SILICONE HOSE	1	38	PTFE WASHER	2
16	IRON COVER	1	39	M4 NUT	1
17	COMPLETE IRON HANDLE	1			
18	CONTROL LABEL	1			
19	SILICONE HOUSING	2			

SILTER

EBADI | KULLANILDIGI YER | KABA | HASSAS | GRAM | RESIM NO | STB110-00-001 | 080214-1,01

MALZEME | TARIH | 27.10.2003 | ADI ve SOYADI | Metin KARAMAN | M.DERECIK | M.TUFAN | STOK KODU | STB 110 PART LIST | REV.NO | IMAL SEKLI | IMAL YERI | ÇIZEN | IRTIBAT | ONAY | ÖLÇEK | DRW. NAME | ADEDI